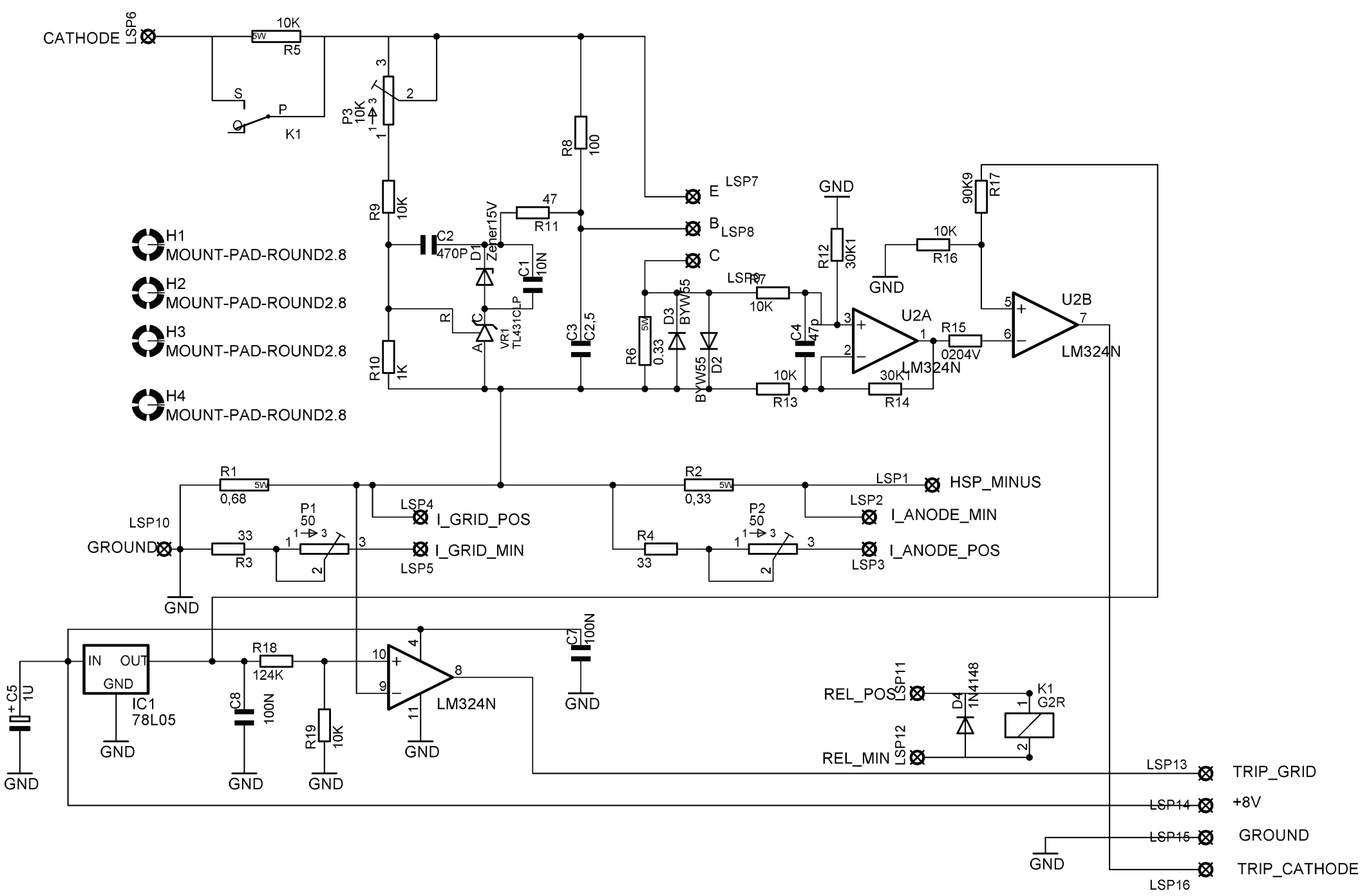
CATHODE
LSP6
10K
5W
R5
S
P
K1
P3
10K
R8
100
R9
10K
C2
470P
Zener15V
D1
47
R11
C1
10N
R
A
C
VR1
TL431CLP
R10
1K
C3
2,5
E
LSP7
B
LSP8
C
LSP9
R6
5W
0,33
D3
BYW55
D2
BYW55
10K
R13
C4
47p
R12
30K1
GND
10K
R16
90K9
R17
U2A
U2B
R15
0204V
LM324N
LM324N
30K1
R14
H1
MOUNT-PAD-ROUND2.8
H2
MOUNT-PAD-ROUND2.8
H3
MOUNT-PAD-ROUND2.8
H4
MOUNT-PAD-ROUND2.8
R1
5W
0,68
R2
5W
0,33
LSP1
HSP_MINUS
LSP2
I_ANODE_MIN
LSP4
I_GRID_POS
P1
50
P2
50
LSP10
GROUND
33
R3
I_GRID_MIN
LSP5
R4
33
I_ANODE_POS
LSP3
GND
C7
100N
IN
OUT
GND
IC1
78L05
C5
1U
R18
124K
C8
100N
R19
10K
LM324N
REL_POS
LSP11
REL_MIN
LSP12
D4
1N4148
K1
G2R
LSP13
TRIP_GRID
LSP14
+8V
LSP15
GROUND
LSP16
TRIP_CATHODE